P3596

LINEAR INTEGRATED CIRCUIT

150KHZ, 3A PWM STEP-DOWN DC/DC CONVERTER

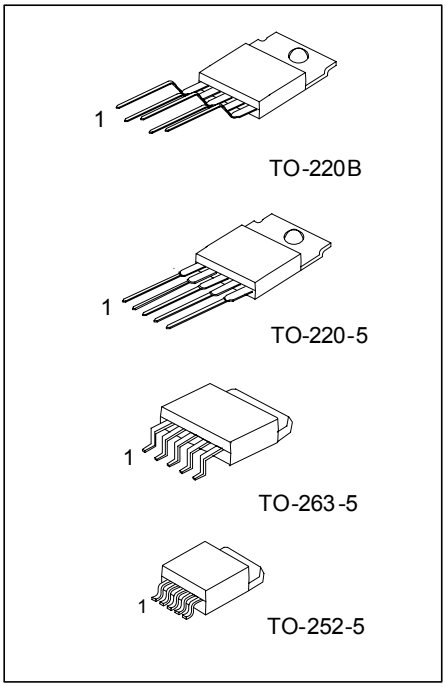

*Pb-free plating product number:P3596L

■ DESCRIPTION

The UTC **P3596** series is a step-down switching regulator able to provide **3A** output current. The available output voltages are **1.5V**, **2.5V, 3.3V, 5V, 12V, and an adjustable** output version.

■ FEATURES

*Output load current: **3A**
*Adjustable version output voltage range, 1.23V ~ 37V±4%
*Operating voltage can be up to **40V** (V_{IN}->40V)
*Low power standby mode
*High efficiency
*Internal current and thermal limit

■ ORDERING INFORMATION

Order Number		Package	Packing
Normal	Lead Free Plating		
P3596-xx-TA5-T	P3596L-xx-TA5-T	TO-220-5	Tube
P3596-xx-TB5-T	P3596L-xx-TB5-T	TO-220B	Tube
P3596-xx-TN5-R	P3596L-xx-TN5-R	TO-252-5	Tape Reel
P3596-xx-TN5-T	P3596L-xx-TN5-T	TO-252-5	Tube
P3596-xx-TQ5-R	P3596L-xx-TQ5-R	TO-263-5	Tape Reel
P3596-xx-TQ5-T	P3596L-xx-TQ5-T	TO-263-5	Tube

Note: xx: Output Voltage, refer to Marking Information.

P3596L-xx-TA5-T
(1)Packing Type
(2)Package Type
(3)Output Voltage Code
(4)Lead Plating

(1) R: Tape Reel, T: Tube
(2) TA5: TO-220-5, TB5: TO-220B, TN5: TO-252-5, TQ5: TO-263-5
(3) xx: refer to Marking Information
(4) L: Lead Free Plating, Blank: Pb/Sn

Copyright © 2005 Unisonic Technologies Co., Ltd

■ PIN DESCRIPTION

PIN NO.	PIN NAME	DESCRIPTION
1	V_{IN}	Operating voltage input
2	Output	Switching output
3	GND	Circuit Ground
4	FB (Feedback)	Output voltage feedback control
5	SD (Shutdown)	ON/OFF shutdown

■ MARKING INFORMATION

PACKAGE	VOLTAGE CODE	MARKING
TO-220-5 TO-220B TO-252-5 TO-263-5	15:1.5V 25:2.5V 33:3.3V 50:5.0V 12:12V AD:ADJ	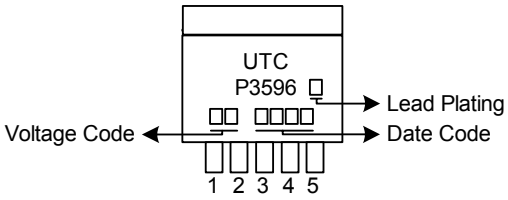

■ THERMAL DATA

PARAMETER		SYMBOL	RATINGS	UNIT
Thermal Resistance Junction to Case	TO-220B TO-220-5 TO-263-5 TO-252-5	θ_{JC}	3 3 4 8	℃/W
Thermal Resistance Junction to Ambient	TO-220B TO-220-5 TO-263-5 TO-252-5	θ_{JA}	45 45 55 90	℃/W

■ BLOCK DIAGRAM

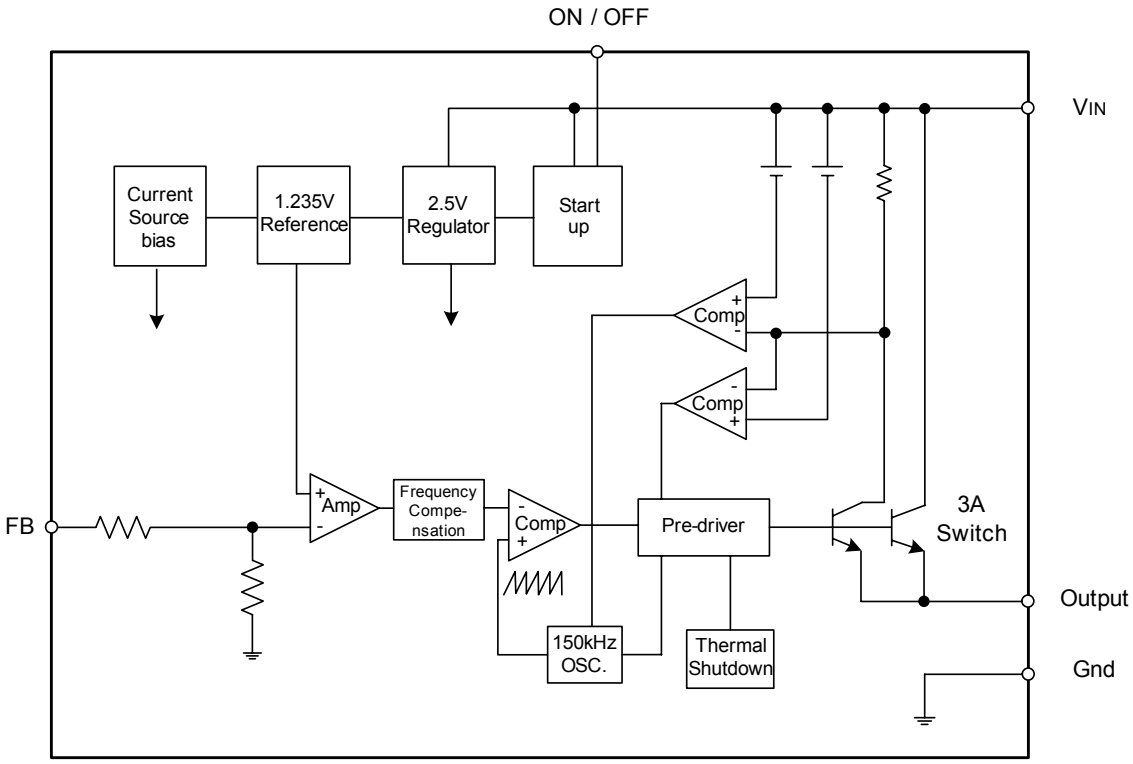

■ ABSOLUTE MAXIMUM RATINGS

PARAMETER	SYMBOL	RATINGS	UNIT
Maximum Supply Voltage	V_{CC}	45	V
Operating Voltage	V_{OPR}	4.5 ~ 40	V
ON/OFF Pin Input Voltage	$V_{ON/OFF}$	-0.3 ~ +25	V
Feedback Pin Voltage	V_{FB}	-0.3 ~ +25	V
Output Voltage to Ground (Steady State)	V_{OUT}	-1	V
Power Dissipation	P_D	Internally limited	mW
Maximum Junction Temperature	T_J	+150	℃
Temperature Range	T_{OPR}	-40 ~ +125	℃
Storage Temperature Range	T_{STG}	-65 ~ +150	℃

Note: Absolute maximum ratings are those values beyond which the device could be permanently damaged. Absolute maximum ratings are stress ratings only and functional device operation is not implied.

■ ELECTRICAL CHARACTERISTICS

(T_J=25℃, V_{IN}=12V for the 3.3V, 5V, and Adjustable version and V_{IN}=24V for the 12V version, I_{LOAD}=500mA.)

PARAMETER		SYMBOL	TEST CONDITIONS	MIN	TYP	MAX	UNIT
Output Voltage	**1.5V**	V_{OUT}	2.8V≦V_{IN}≦40V, 0.2A≦I_{LOAD}≦3A	1.44	1.5	1.56	V
	2.5V		3.8V≦V_{IN}≦40V, 0.2A≦I_{LOAD}≦3A	2.4	2.5	2.6	V
	3.3V		4.75V≦V_{IN}≦40V, 0.2A≦I_{LOAD}≦3A	3.168	3.3	3.432	V
	5.0V		7V≦V_{IN}≦40V, 0.2A≦I_{LOAD}≦3A	4.8	5.0	5.2	V
	12V		15V≦V_{IN}≦40V, 0.2A≦I_{LOAD}≦3A	11.52	12.0	12.48	V
Efficiency	**1.5V**	η	V_{IN}=12V, I_{LOAD}=3A		73		%
	2.5V		V_{IN}=12V, I_{LOAD}=3A		73		%
	3.3V		V_{IN}=12V, I_{LOAD}=3A		73		%
	5.0V		V_{IN}=12V, I_{LOAD}=3A		80		%
	12V		V_{IN}=25V, I_{LOAD}=3A		90		%
UTC P3596-ADJ							
Feedback Voltage		V_{FB}	4.5V≦V_{IN}≦40V, 0.2A≦I_{LOAD}≦3A V_{OUT} programmed for 3V	1.193	1.230	1.267	V
Efficiency		η	V_{IN}=12V, V_{OUT}=3V, I_{LOAD}=3A		73		%
ALL OUTPUT VOLTAGE							
Feedback Bias Current		I_{BIAS}	Adjustable Version Only, V_{FB}=1.3V		10	50	nA
Oscillator Frequency		f_{OSC}	(Note 1)	127	150	173	kHz
Saturation Voltage		V_{SAT}	I_{OUT}=3A (Note 2, 3)		1.16	1.4	V
Duty Cycle	Min	DC	ON (Note 3)		100		%
	Max		OFF(Note 4)		0		
Current Limit		I_{LIMIT}	Peak Current (Notes 2, 3)	3.6	4.5	6.9	A
Output Leakage Current		I_{LEAK}	Output=0V (Notes 2, 4)			50	μA
			Output=-1V, V_{IN} = 40V		2	30	mA
Quiescent Current		I_Q	(Note 4)		5	10	mA
Standby Quiescent Current		I_{STBY}	ON/OFF pin=5V (OFF), V_{IN} = 40V		80	200	μA
ON/OFF CONTROL							
ON/OFF Pin Logic Input Threshold Voltage	Low	V_{IH}	Regulator ON	0.6	1.3		V
	High	V_{IL}	Regulator OFF	2.0			
ON/OFF Pin Input Current		I_H	V_{LOGIC}=2.5V (Regulator OFF)		5	15	μA
		I_L	V_{LOGIC}=0.5V (Regulator ON)		0.02	5	μA

Note: 1.The switching frequency is reduced when the second stage current limit is activated.
2.No diode, inductor or capacitor connected to output pin.
3.Feedback pin removed from output and connected to 0V to force the output transistor switch ON.
4.Feedback pin removed from output and connected to 15V for the 12V version, and 12V for others to force the output transistor switch OFF.

■ TYPICAL APPLICATION

For Fixed Versions

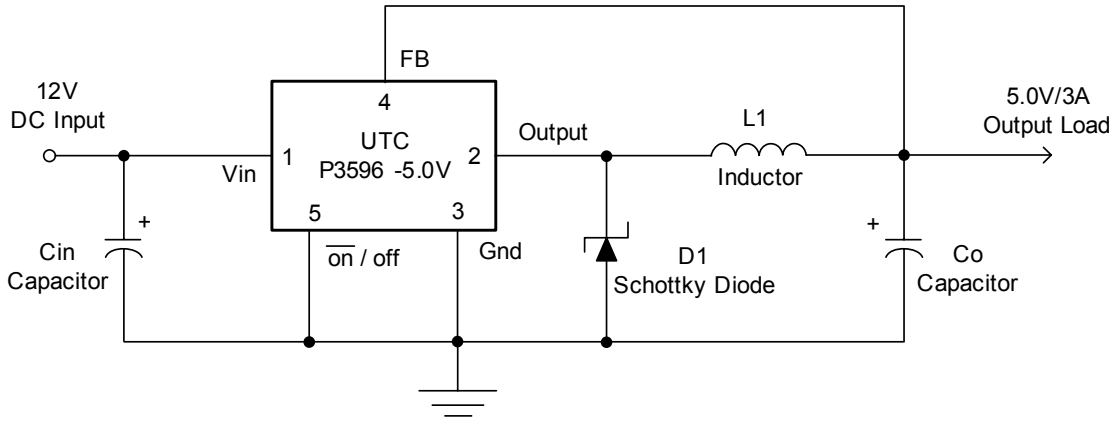

Note: The DC input would be 15V for 12V version.

For Adjustable Version

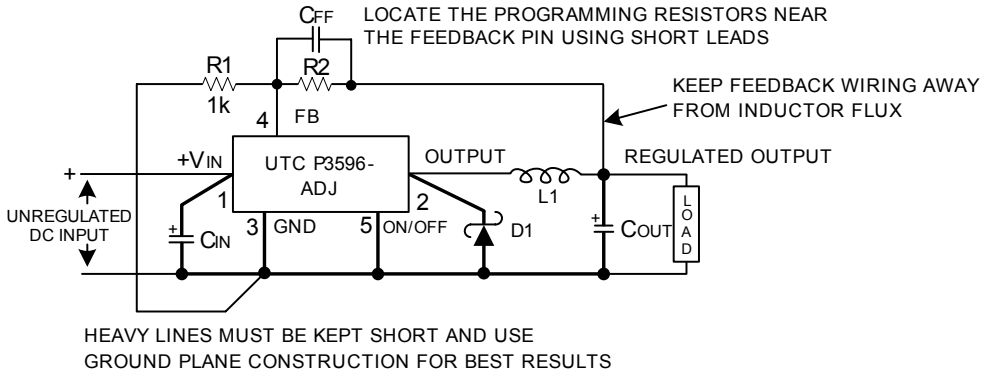

$$V_{OUT} \times \left(\frac{R1}{R1 + R2} \right) = V_{REF}$$

$$V_{OUT} = V_{REF} \left(1 + \frac{R2}{R1}\right)$$

Where V_{REF} = 1.23V

$$R2 = R1\left(\frac{V_{OUT}}{V_{REF}} - 1 \right)$$

■ TYPICAL CHARACTERISTICS

Normalized Output Voltage

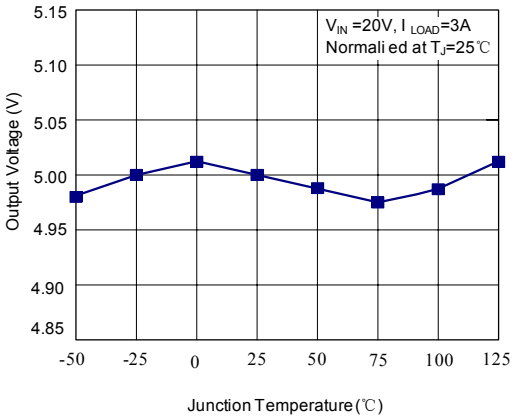

Line Regulation

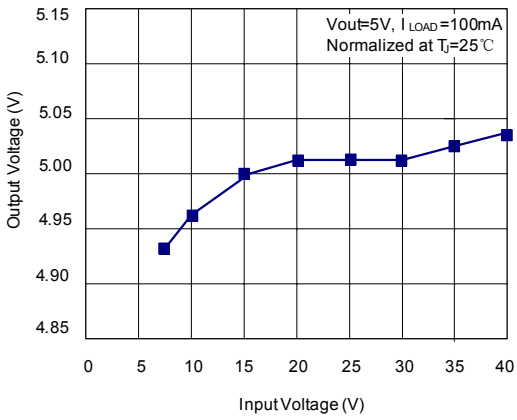

Efficiency

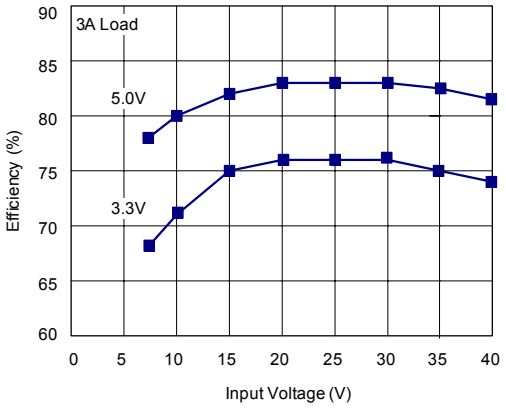

Switch Saturation Voltage

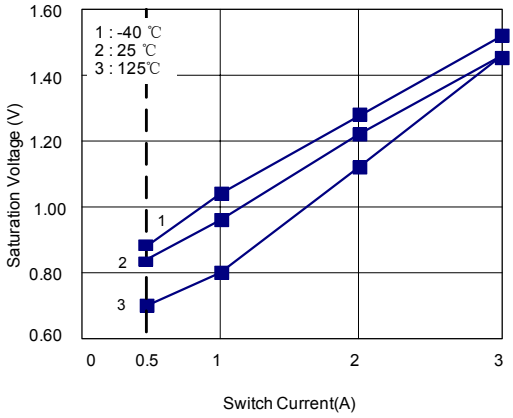

Switch Current Limit

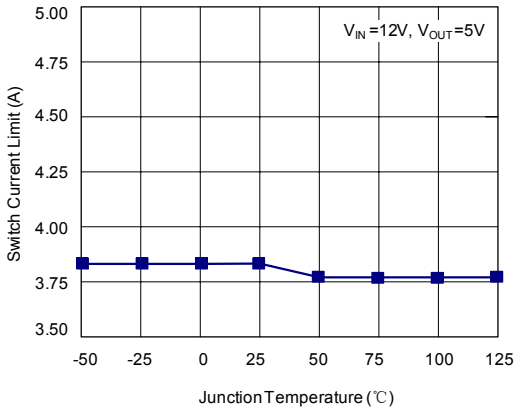

Operating Quiescent Current

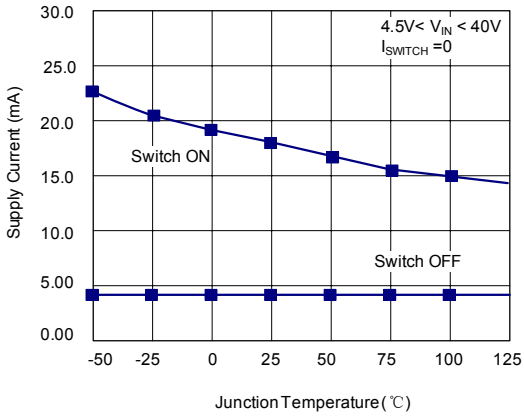

■ TYPICAL CHARACTERISTICS (Cont.)

Shutdown Quiescent Current

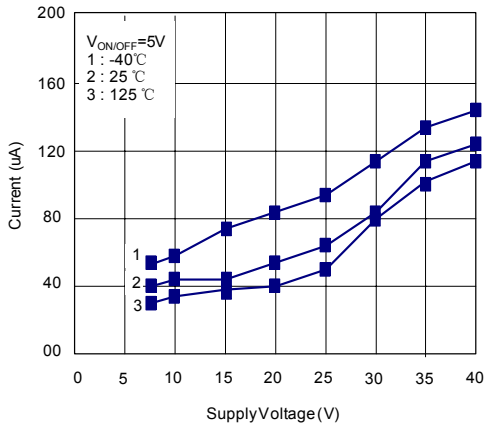

Minimum Operating Supply Voltage

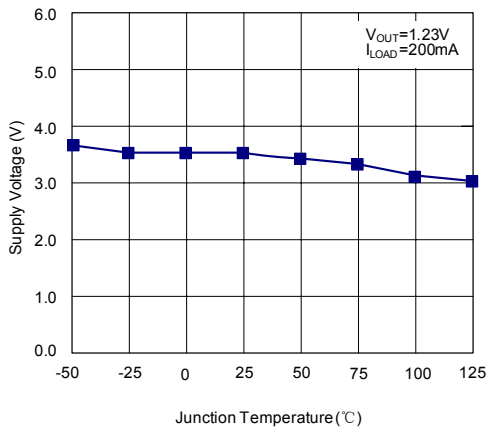

ON/OFF Threshold Voltage

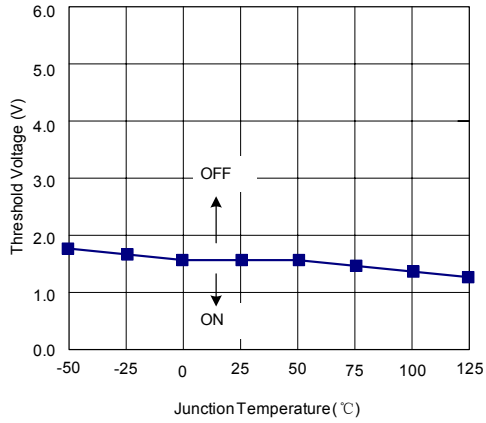

ON/OFF Pin Current (Sinking)

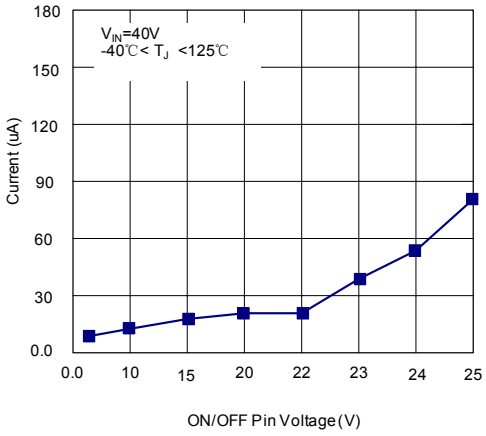

Switch Frequency

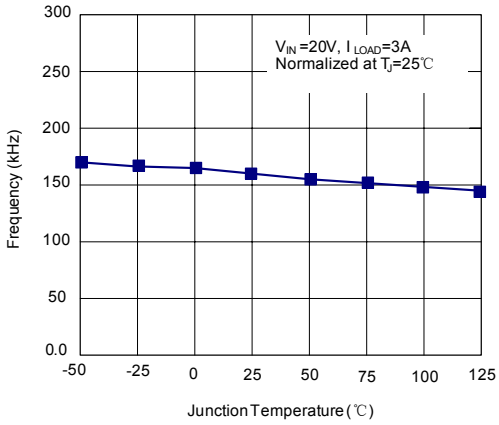

Feedback Pin Bias Current

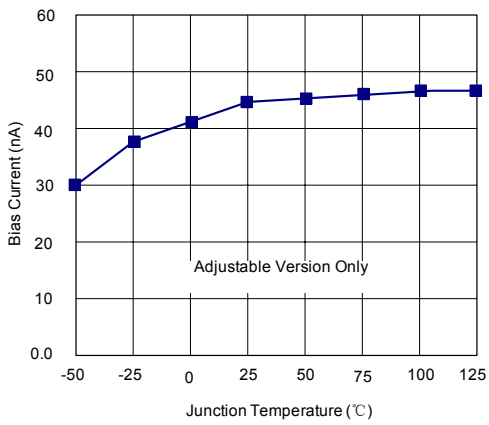

UTC assumes no responsibility for equipment failures that result from using products at values that exceed, even momentarily, rated values (such as maximum ratings, operating condition ranges, or other parameters) listed in products specifications of any and all UTC products described or contained herein. UTC products are not designed for use in life support appliances, devices or systems where malfunction of these products can be reasonably expected to result in personal injury. Reproduction in whole or in part is prohibited without the prior written consent of the copyright owner. The information presented in this document does not form part of any quotation or contract, is believed to be accurate and reliable and may be changed without notice.