REVISIONS				
LTR	DESCRIPTION	DATE	REVISED	APPROVED
△X 1	顏色及電鍍改爲參照顏色料號圖	2003.09.27	Chillbon	KUNG

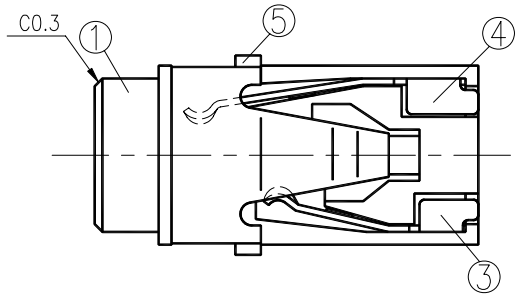

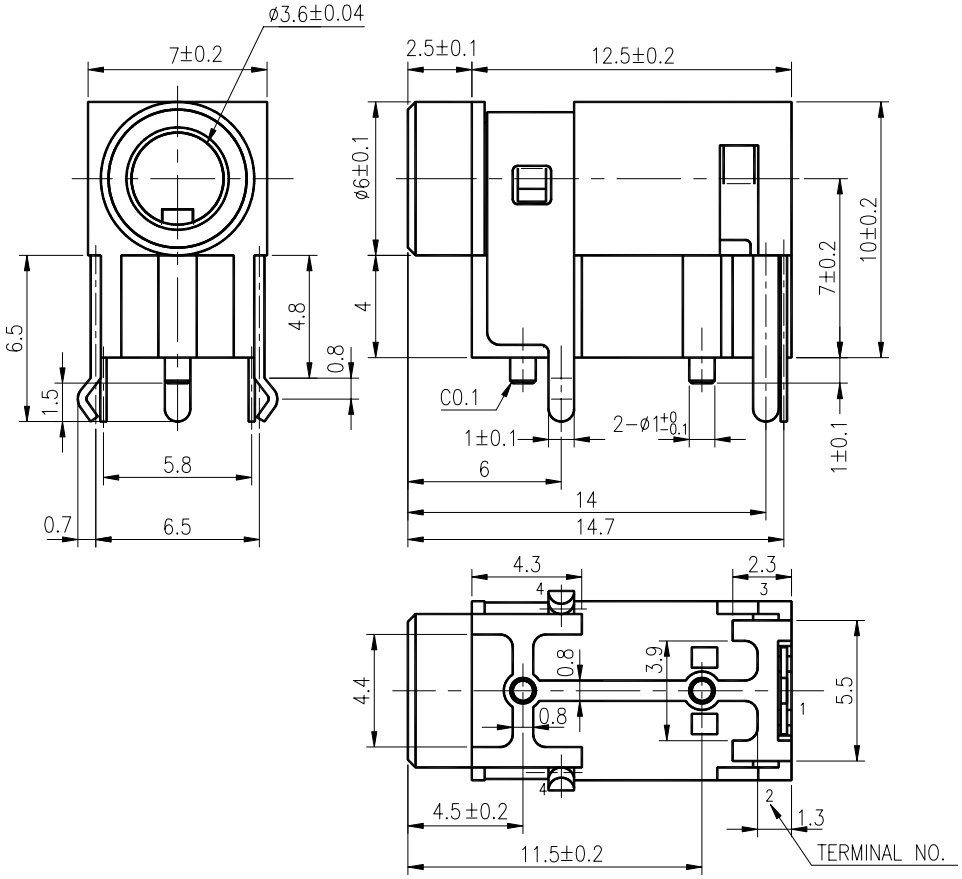

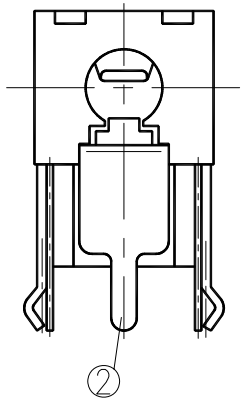

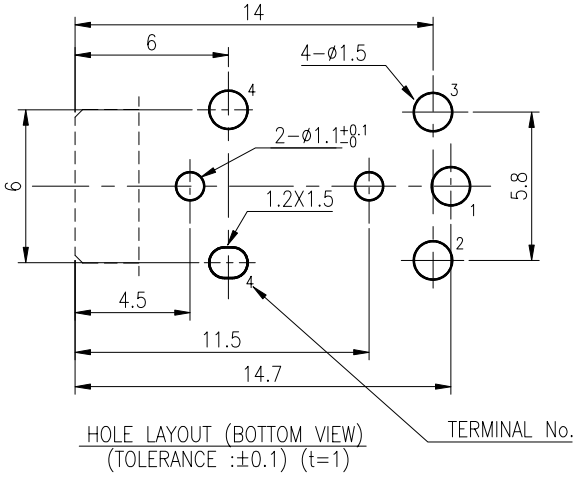

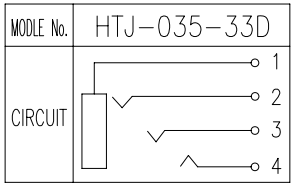

LTR	PART NAME	QTY	MATERIAL	REMARK
5	TIP SPRING	1	C5210 ; t=0.4	△Please refer color combination list.
4	RING SPRING (2)	1	C5210 ; t=0.25	
3	RING SPRING (1)	1	C5210 ; t=0.25	
2	EARTH SPRING	1	C5210 ; t=0.25	
1	HOUSING	1	PA66+15%GF	

DWN	Chillbon	DATE	2003.09.27	SCALE	NAME MINIATURE JACK
DSND	Chillbon	DATE	2003.09.27	PROJECTION	
CHKD	DAVID	DATE	2003.09.27		CAT. No. HTJ-035-33D
APVD	KUNG	DATE	2003.09.30	UNIT : mm	

KUNMING ELECTRONICS CO., LTD.

DWN. No. A-03533D 1/1 B

UNLESS OTHERWISE SPECIFIED, TOLERANCE ON DECIMAL:±0.3 ANGLES:±5°