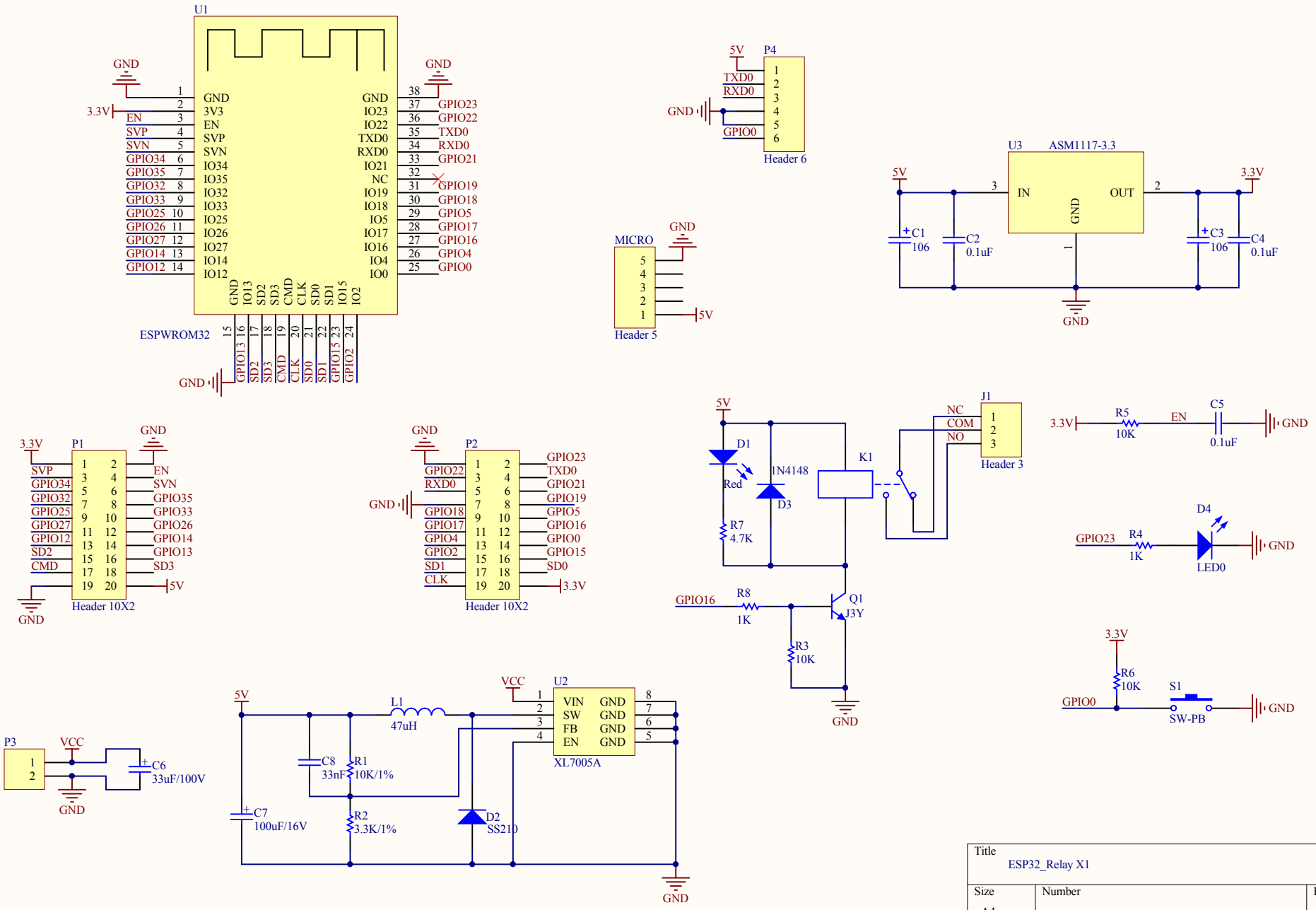
U1
ESPWROM32
GND
3.3V
EN
SVP
SVN
GPIO34
GPIO35
GPIO32
GPIO33
GPIO25
GPIO26
GPIO27
GPIO14
GPIO12
3V3
IO34
IO35
IO32
IO33
IO25
IO26
IO27
IO14
IO12
IO13
SD2
SD3
CMD
CLK
SD0
SD1
IO15
IO2
IO23
IO22
TXD0
RXD0
IO21
NC
IO19
IO18
IO5
IO17
IO16
IO4
IO0
GPIO23
GPIO22
GPIO21
GPIO19
GPIO18
GPIO5
GPIO17
GPIO16
GPIO4
GPIO0
GPIO13
GPIO2
P4
5V
Header 6
MICRO
Header 5
U3
ASM1117-3.3
IN
OUT
C1
106
C2
0.1uF
C3
106
C4
0.1uF
P1
Header 10X2
P2
Header 10X2
D1
Red
1N4148
D3
R7
4.7K
K1
J1
NC
COM
NO
Header 3
R5
10K
C5
0.1uF
D4
LED0
R4
1K
R8
1K
Q1
J3Y
R3
10K
R6
10K
S1
SW-PB
P3
VCC
C6
33uF/100V
L1
47uH
C8
33nF
R1
10K/1%
R2
3.3K/1%
C7
100uF/16V
D2
SS210
U2
XL7005A
VIN
SW
FB
EN
Title
ESP32_Relay X1
Size
A4
Number
Revision
SX
Date:
2021/11/10
Sheet of
File:
E:\(7)\..\ESP32_Relay X1.SchDoc
Drawn By:
YXW